UMBRA RIMORCHI
GANCI TRAINO E RIMORCHI
TOWBARS AND TRAILERS

www.umbrarimorchi.it
umbrarimorchi@umbrarimorchi.it

Tel. +39 075.5280260
Fax +39 075.5287033
Via Pizzoni 37/39
06132 Perugia
ITALY

Member of CISQ Federation
RINA
ISO 9001:2008
Sistema Qualità Certificato

ISTRUZIONI DI MONTAGGIO

FITTING INSTRUCTIONS
INSTRUCTIONS DE MONTAGE
MONTAGEANLEITUNG
INSTRUCCIONES DE MONTAJE

DISPOSITIVO DI TRAINO TIPO TOWING BRACKET TYPE DISPOTIF DE REMORQUAGE TYPE ANHAENGEVORRICHTUNG TYP DISPOSITIVO DE CAREO TIPO	**33020/C**

PER AUTOVEICOLI FOR CARS POUR AUTOS FUR KRAFTAHRZEUGE PARA AUTOVEHICULO	**SEAT TOLEDO, SEAT ALTEA XL**	
TYPE	**5P AB, 5P AC**	**TOLEDO 2004 =>** **ALTEA 2004 =>**
CLASSE E TIPO DI ATTACCO CLASS AND HITCH TYPE CLASSE ET TYPE DE CROCHET KLASSE UND BEFESTIGUNGSART CLASES DE ACOPLAMIENTO	**OMOLOGAZIONE** HOMOLOGATION HOMOLOGATION ZULASSUNG APROBACION	**CARICO VERTICALE MAX** S VALUE MASSE VERTICALE MAXIMUM ZUL. STUETZLAST CARGA MAX. VERTICAL
F	**e3 00 – 7242** (DIR. 94/20/CE)	**S = kg 95**
VALORE D D VALUE VALEUR D D WERT VALOR D	**D = 9 kN**	$D = \frac{\text{Max} \downarrow \text{Kg} \times \text{Max} \downarrow \text{Kg}}{\text{Max} \downarrow \text{Kg} + \text{Max} \downarrow \text{Kg}} \times 0{,}00981 \leqslant$ **9 kN**

COPPIA DI SERRAGGIO PER VITI (8.8): TORQUE SETTINGS FOR NUTS AND BOLTS (8.8): COUPLE DE SERRAGE POUR VIS (8.8): SCHRAUBENANZUGSMOMENT (8.8): MOM. DE PRESION PARA TORNILLOS Y TUERCAS (8.8):	M6 = 10 Nm M10 = 55 Nm M14 = 135 Nm	M8 = 25 Nm M12 = 85 Nm M16 = 200 Nm

SAFETY INSTRUCTIONS

- Make sure that the tow-bar is suitable for the vehicle before starting the installation.
- For safety, all work involving tow-bar installation (incl. electrical components) must be undertaken by skilled technicians.
- Damaged components must be replaced with manufacturer's spares and fitted by qualified staff.
- It is forbidden to make any modification or structural repair to towing assembly.
- The tow-ball must be kept clean and lubricated. For added safety, his diameter (50 mm) must be checked at regular intervals. If the tow-ball measures less than 49 mm after selected readings across the diameter, the tow-ball must be replaced with a new one.
- After 1000 km of towing, check torque settings for nuts and bolts, in accordance with the table.
- **Umbra Rimorchi cannot be held responsible for any defects in the product caused by fault or by any injudicious use whatever of the user or a person he is liable for.**

FITTING INSTRUCTIONS
33020/C
SEAT TOLEDO,
SEAT ALTEA XL

Remove any mastic from contact points then paint with anti rust paint.

1) Remove bumper and discard the bumper reinforcement bar.
2) Just for Seat Altea XL: remove the square covers in plastic.
3) Uncover holes 01 (that are on the outside face of each chassis member) from adhesive tape.
4) Insert the side arms of the A cross bar inside the chassis rails referring to holes 01 and fit.
5) Tighten all bolts and nuts as per torque settings.
6) Connect the wirings to the socket.
7) Cut the bumper as per attached layout based on the article that you are fitting.
8) Re-fit bumper.

ITEM: 33020/C

01) Nr. 4 / SCREW M10x30 – WASHER ø40 – CONTACT
02) Nr. 4 / SCREW M12x35 – NUT – CONTACT
03) BOLTS AND NUTS M12 – SPACERS AS REQUIRED

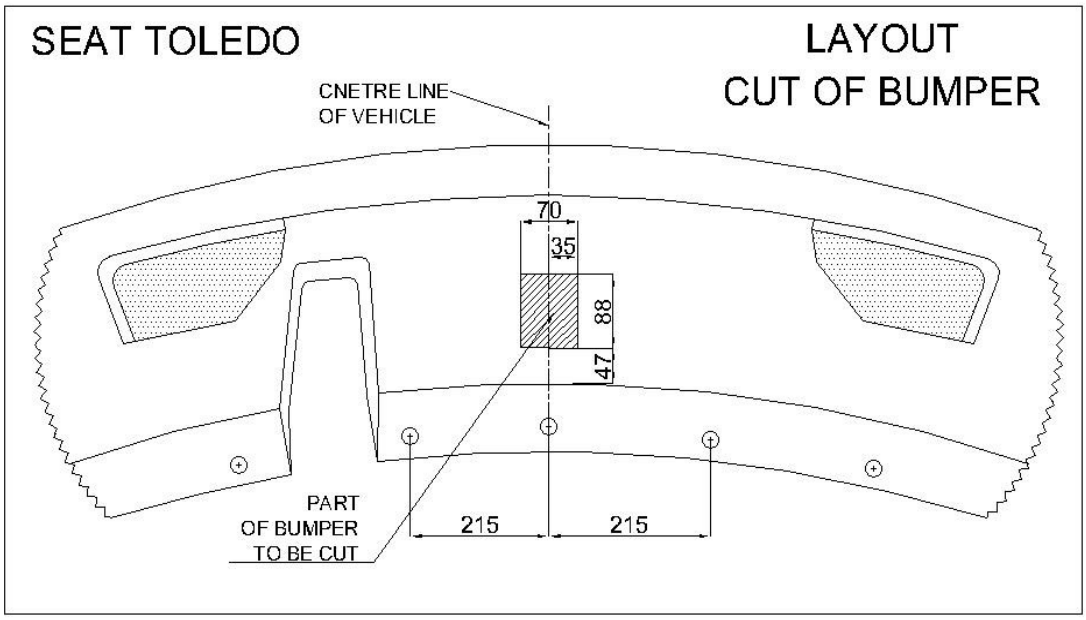

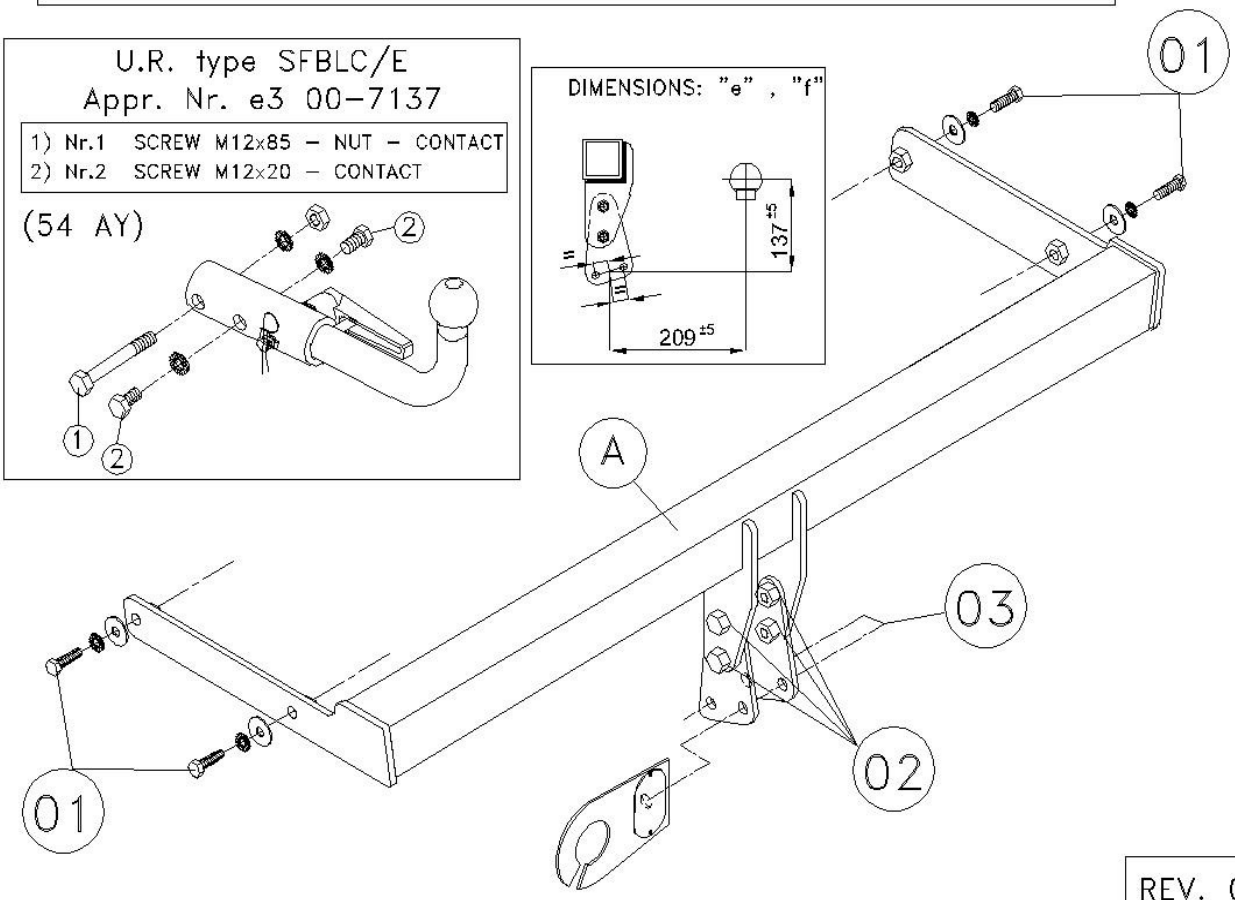

REV. 00

CUT OF BUMPER FOR SEAT ALTEA XL

33020/VM

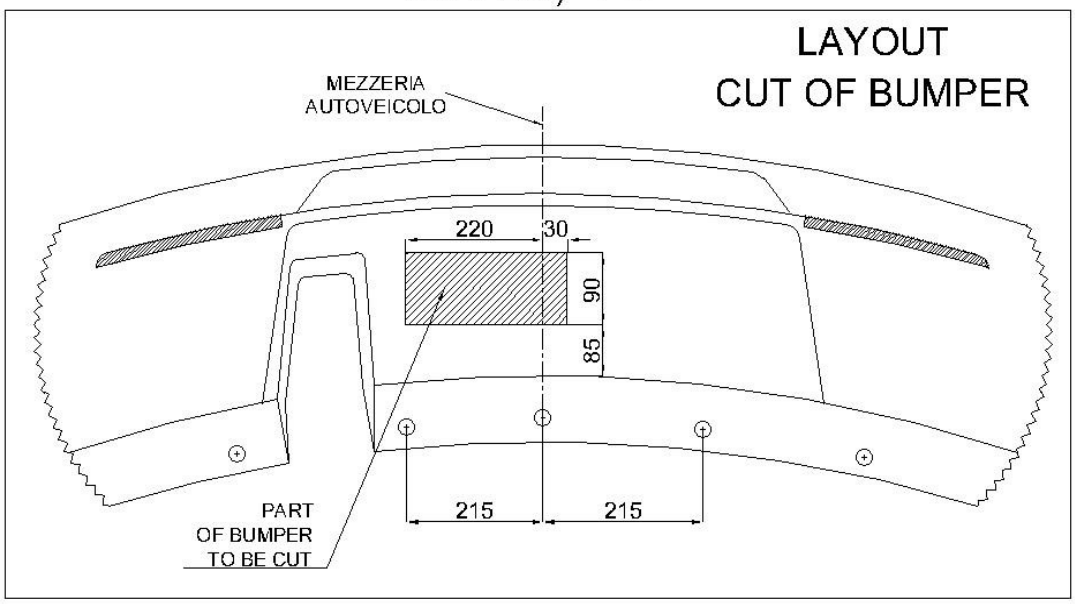

33020/C

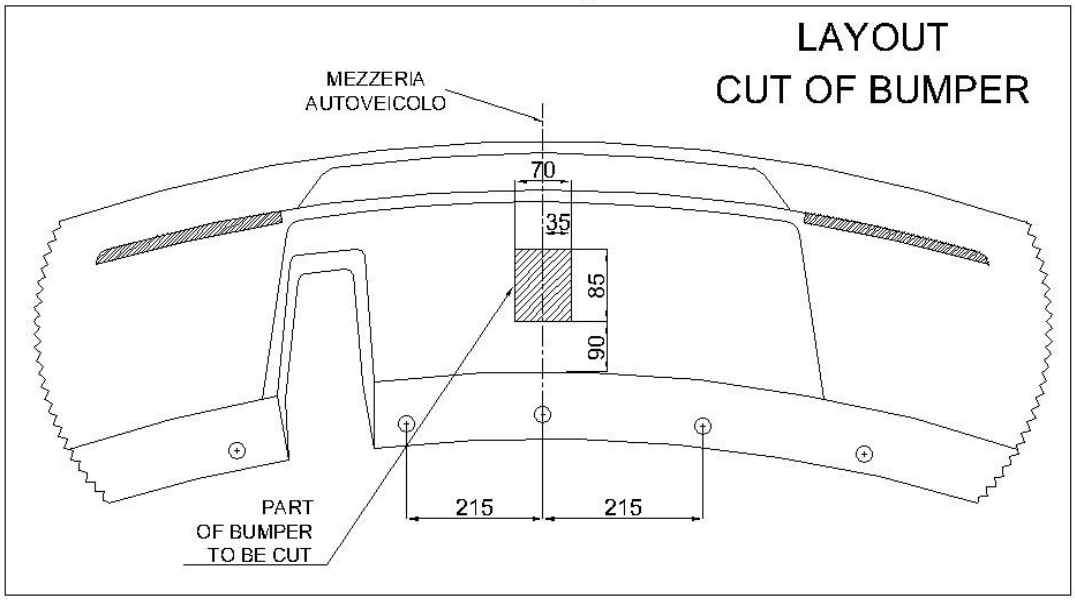

REV. 00

D Der Freiraum nach Anhang VII, Abbildung 30 der Richtlinie 94/20/EG ist zu gewährleisten.

CZ Volný prostor ve smyslu Přílohy VII, obr. 30 Směrnice č. 94/20/EG musí být zaručen.

DK Frirummet skal overholdes iht. bilag VII, fig. 30 i direktiv 94/20/EF.

E Debe garantizarse el espacio libre, conforme al anexo VII, imagen 30 de la directiva comunitaria 94/20/CE.

F L'espace libre doit être garanti conformément à l'annexe VII, illustration 30 de la directive 94/20/CE.

FIN Liitteen VII, direktiivin 94/20/EY kuvan 30 mukainen vapaatila on taattava.

GB The clearance specified in appendix VII, diagram 30 of guideline 94/20/EC must be guaranteed.

GR Πρέπει να εξασφαλίζεται ο ελεύθερος χώρος σύμφωνα με το Παράρτημα VII, εικόνα 30 της Οδηγίας 94/20/ΕΚ.

I Deve essere garantito lo spazio libero secondo l'allegato VII, figura 30 della direttiva 94/20/CE.

N Frirommet etter tillegg VII, figur 30 i direktiv 94/20/EØF skal overholdes.

NL De tussenruimte volgens aanhangsel VII, afbeelding 30 van de richtlijn 94/20/EG moet in acht worden genomen.

PL Zagwarantować swobodną przestrzeń zgodnie z załącznikiem VII, rysunek 30 dyrektywy 94/20/CE.

S Glappet enligt bilaga VII, bild 30 i direktiv 94/20/EG ska garanteras.

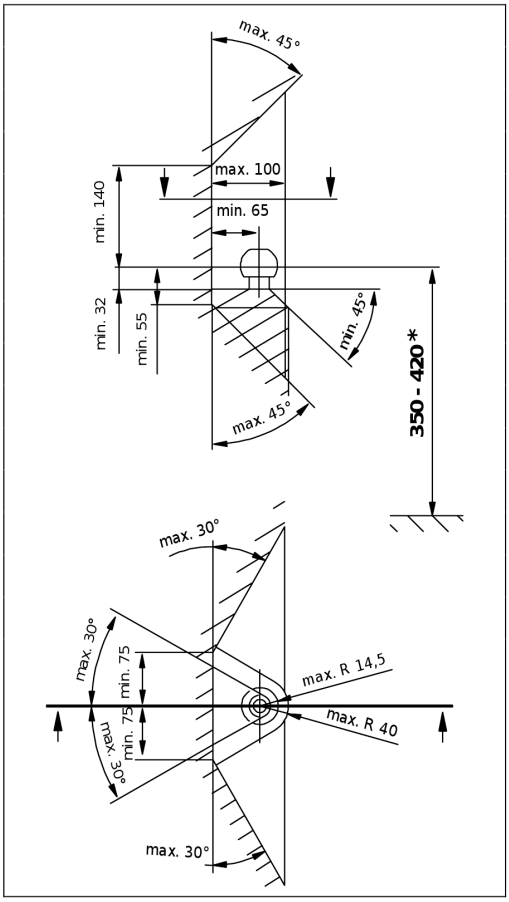

D * bei zulässigem Gesamtgewicht des Fahrzeuges

CZ * při celkové přípustné hmotnosti vozidla

DK * ved tilladt totalvægt for køretøjet

E * con peso total autorizado del vehículo

F * pour poids total en charge autorisé du véhicule

FIN * Ajoneuvon suurimmalla sallitulla kokonaispainolla

GB * at gross vehicle weight rating

GR * για το επιτρεπτό μικτό βάρος του οχήματος

I * per il peso complessivo ammesso del veicolo

N * ved kjøretøyets tillatte totalvekt

NL * bij toegestaan totaal gewicht van het voertuig

PL * przy dopuszczalnym ciężarze całkowitym pojazdu

S * vid fordonets tillåtna totalvikt

MECCANISMO MOD. C 2007

UMBRA RIMORCHI
tel. +39 075 5280260
fax +39 075 5287033
www.umbrarimorchi.it
umbrarimorchi@umbrarimorchi.it

NL - Montage	**S** - Montering	**I** - Montaggio
GB - Mounting	**DK** - Tilkobling	
D - Montage	**FIN** - Asennus	
F - Montage	**E** - Montaje	
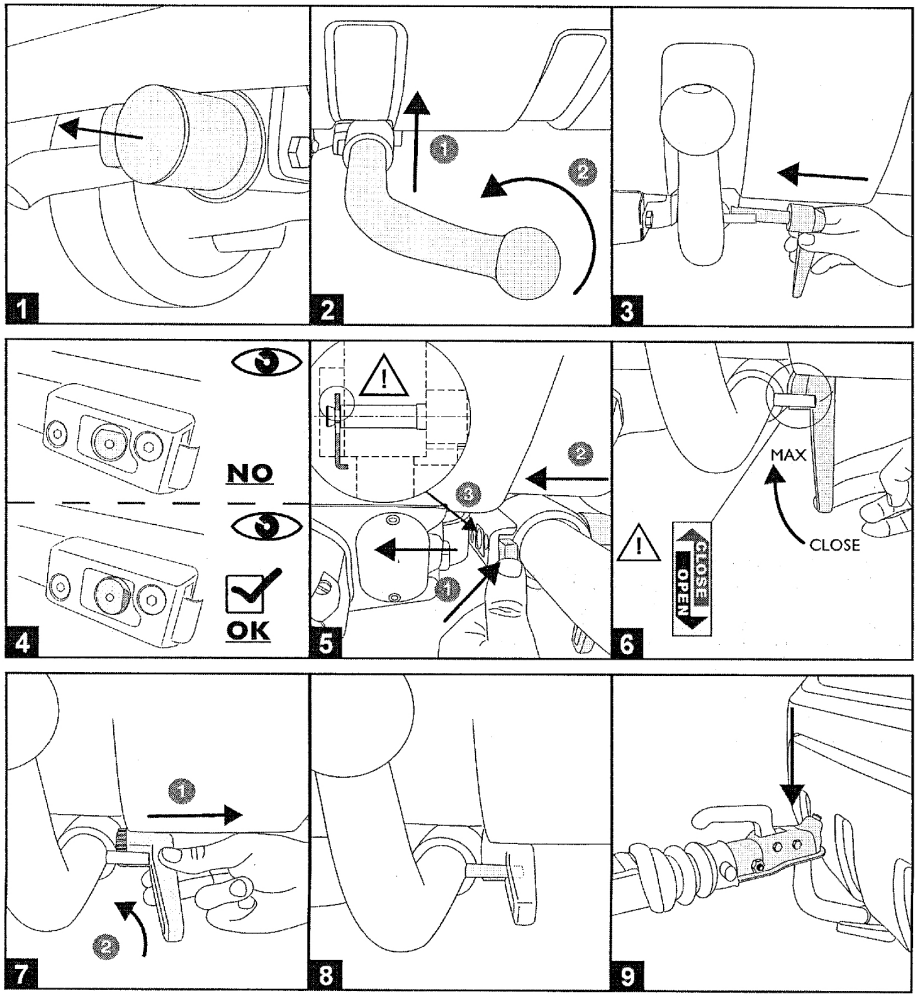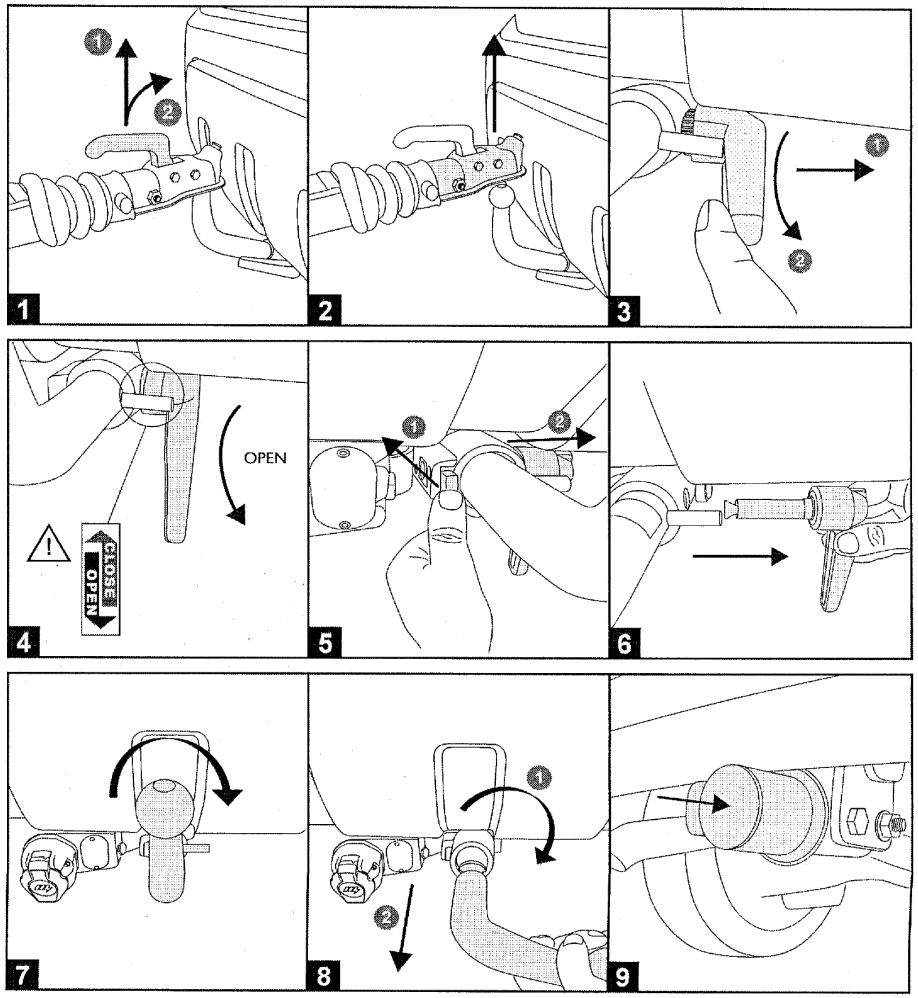
NL - Demontage	**S** - Demontering	**I** - Smontaggio
GB - Disounting	**DK** - Frakobling	
D - Demontage	**FIN** - Irrotta	
F - Démontage	**E** - Desmontaje