UMBRA RIMORCHI
Via C. Pizzoni 37/39, 06132 Perugia - Italy
Tel. +39 075 5280260
Fax +39 075 5287033
www.umbrarimorchi.it
umbrarimorchi@umbrarimorchi.it

GANCI TRAINO E RIMORCHI
TOWBARS AND TRAILERS

Member of CISQ Federation RINA ISO 9001:2008 Sistema Qualità Certificato

ISTRUZIONI DI MONTAGGIO

FITTING INSTRUCTIONS
INSTRUCTIONS DE MONTAGE
MONTAGEANLEITUNG
INSTRUCCIONES DE MONTAJE
ИНСТРУКЦИЯ ПО УСТАНОВКЕ

DISPOSITIVO DI TRAINO TIPO TOWING DISPOSAL TYPE TYPE DU DISPOSITIF DE REMORQUAGE ANHÄNGERVORRICHTUNG TYP DISPOSITIVO DE CAREO TIPO ТЯГОВО-СЦЕПНОЕ УСТРОЙСТВО	**33020**
PER AUTOVEICOLI FOR CARS POUR VÉHICULES AUTOMOBILES FÜR KRAFTAHRZEUGE PARA AUTOVEHICULO ДЛЯ АВТОМОБИЛЕЙ	**SEAT TOLEDO,** **SEAT ALTEA XL** 2004 => 2006 => (5P AB, 5P AC)
CLASSE E TIPO DI ATTACCO CLASS AND HITCH TYPE CLASSE ET TYPE DE CROCHET KLASSE UND BEFESTIGUNGSART CLASES DE ACOPLAMIENTO КЛАСС И ТИП СОЕДИНЕНИЯ	F
OMOLOGAZIONE HOMOLOGATION HOMOLOGATION ZULASSUNG APROBACION ОМОЛОГАЦИЯ	e3 00 – 7242 (DIR. 94/20/CE)
CARICO VERTICALE MAX S VALUE MASSE VERTICALE MAXIMUM ZUL. STUETZLAST CARGA MAX. VERTICAL МАКСИМАЛЬНАЯ ВЕРИКАЛЬНАЯ НАГРУЗКА	S = kg 95
VALORE D D VALUE VALEUR D D WERT VALOR D ЗНАЧЕНИЕ	$D = \frac{\text{Max} \downarrow \text{Kg} \times \text{Max} \downarrow \text{Kg}}{\text{Max} \downarrow \text{Kg} + \text{Max} \downarrow \text{Kg}} \times 0{,}00981 \leqslant 9\ \text{kN}$
COPPIA DI SERRAGGIO PER VITI (8.8): TORQUE SETTINGS FOR NUTS AND BOLTS (8.8): COUPLE DE SERRAGE POUR VIS (8.8): SCHRAUBENANZUGSMOMENT (8.8): MOM. DE PRESION PARA TORNILLOS Y TUERCAS (8.8): СПИСОК ДЕТАЛЕЙ (8.8):	M6 = 10 Nm M8 = 25 Nm M10 = 55 Nm M12 = 85 Nm M14 = 135 Nm M16 = 200 Nm

SAFETY INSTRUCTIONS

- Make sure that the tow bar is suitable for the vehicle before starting the installation. Verify that the vehicle's towing disposal quoted on the car registration at the points D.1/ D.2 is mentioned on the tow bar document. Otherwise ask the proper office for explanation or updated documents.
- For safety, all work involving tow bar installation must be undertaken by skilled technicians.
- Damaged components must be replaced with manufacturer’s spares parts by qualified staff.
- It is forbidden to make any modification or structural repair to the tow bar.

USE AND MAINTENANCE

- The tow ball must be kept clean and lubricated. For added safety, his diameter (50 mm) must be checked at regular intervals. If the tow ball measures less than 49 mm after selected readings across the diameter, the tow ball must be replaced with a new one.
- After 1000 km of towing, check torque settings for nuts and bolts, in accordance with the table.

CAUTION

The tow bar installer must fix at the same level with the ball in a clear position, a plate with the ball's maximum load for the vehicle on which the tow bar is fitted.

FITTING INSTRUCTIONS

33020

Remove below the vehicle any mastic from contact points between the chassis and the tow bar; then paint mastic free pieces with rust inhibitor.

1. Remove the rear bumper and eliminate the bumper's reinforcement bar;
2. ***ONLY FOR SEAT ALTEA XL*** : eliminate the plastic square parts;
3. Discover the holes "01" (placed on the external side of each chassis-rail) from the adhesive tape;
4. Insert the tie rods of the frame "A" inside of the chassis-rails referring to the holes "01" and fix;
5. Tighten all bolts and nuts as shown in the enclosed layout;
6. Connect the wiring to the socket, following the car booklet's instructions "use and maintenance" as shown in the enclosed wiring kit layout;
7. Make a cut on the bumper according to the type of tow bar which you are fitting, as shown in the enclosed layout;
8. Back together the rear bumper.

INVISIBLE AND SWIVELING SOCKETHOLDER
ONLY FOR ARTICLE 33020/VM

33020

33020/F			
①	2x	M12x85 (8.8)	
②	2x	12.2x27x2.5	
③	2x	M12 (8.8)	
④	2x	SPESSORI SPACERS	

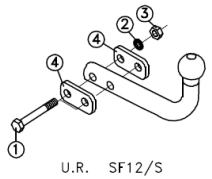

U.R. SF12/S
e3 00-7672

(F54A)

33020/C			
①	2x	M12x25 (8.8)	
②	3x	12.2x27x2.5	
③	1x	M12x85 (8.8)	
④	1x	M12 (8.8)	

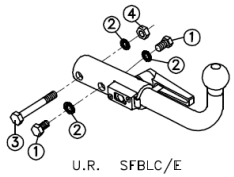

U.R. SFBLC/E
e3 00-7137

(54 AY)

33020/VM			
①	2x	M12x30 (8.8)	
②	2x	M12x25 (8.8)	
③	4x	12.2x27x2.5	

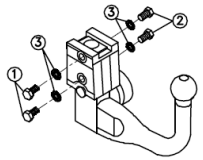

ACS 6004
e4 00-4115

TERWA 30622
e4 00-3919

01	4x	M10x30	CONTACT 10x22x1,5	10x40x2
02	4x	M12x35	CONTACT 12x27x2	M12
03	.	M12		

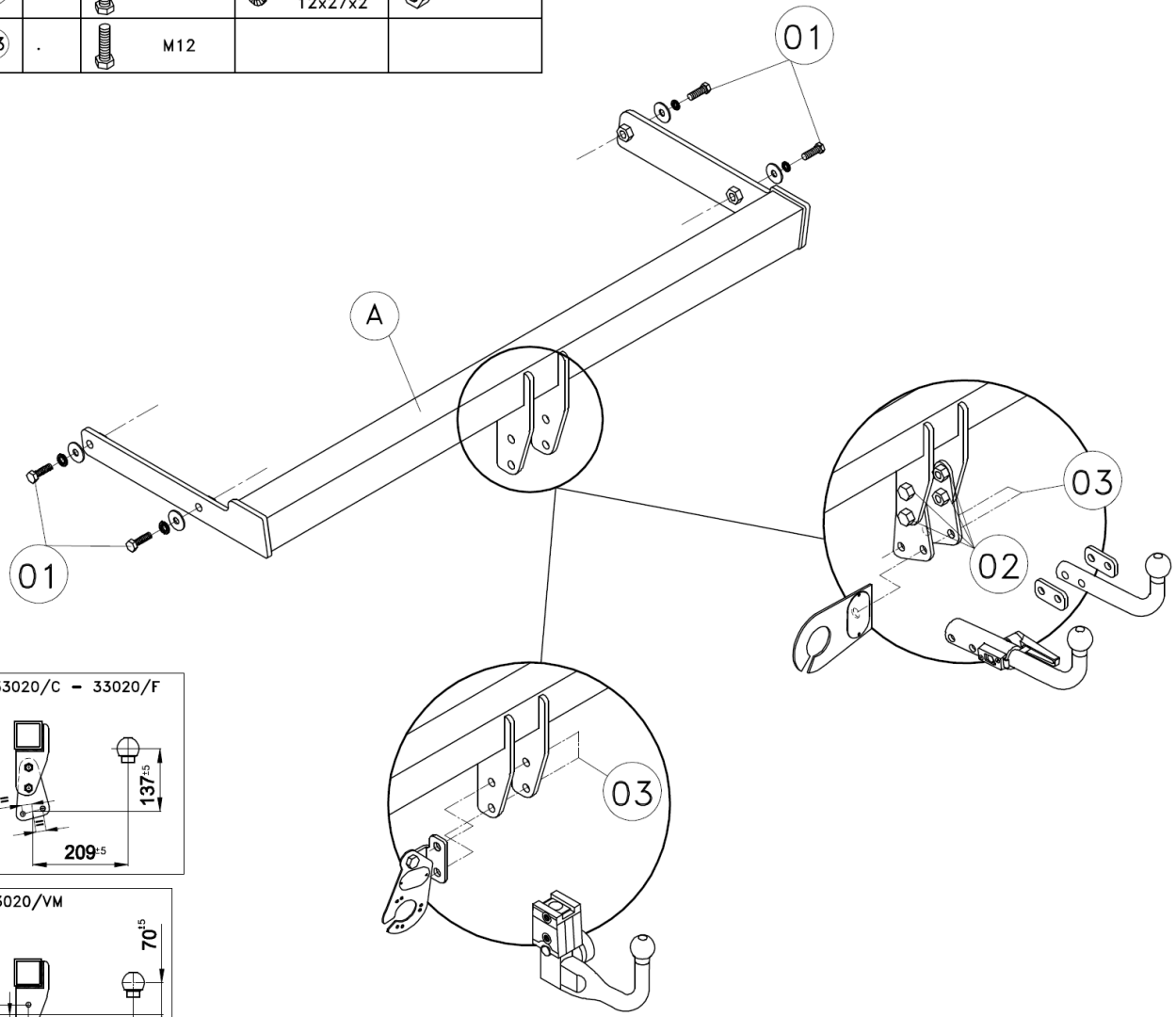

33020/C - 33020/F

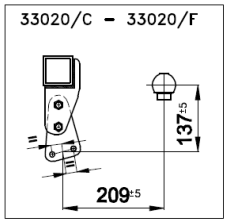

33020/VM

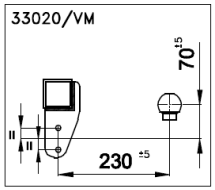

REV.00

P. 4 / 8

UMBRA RIMORCHI

01/01/11

v. 1.0

33020
- SEAT TOLEDO,
SEAT ALTEA XL-

TAGLIO PARAURTI
BUMPER'S CUT
DÉCOUPE PARE-CHOCS
AUSSCHNITT STOßSTANGE
РАЗРЕЗ БАМПЕРА
РОЗРІЗ БАМПЕРУ

SEAT ALTEA XL

33020/C - 33020/F

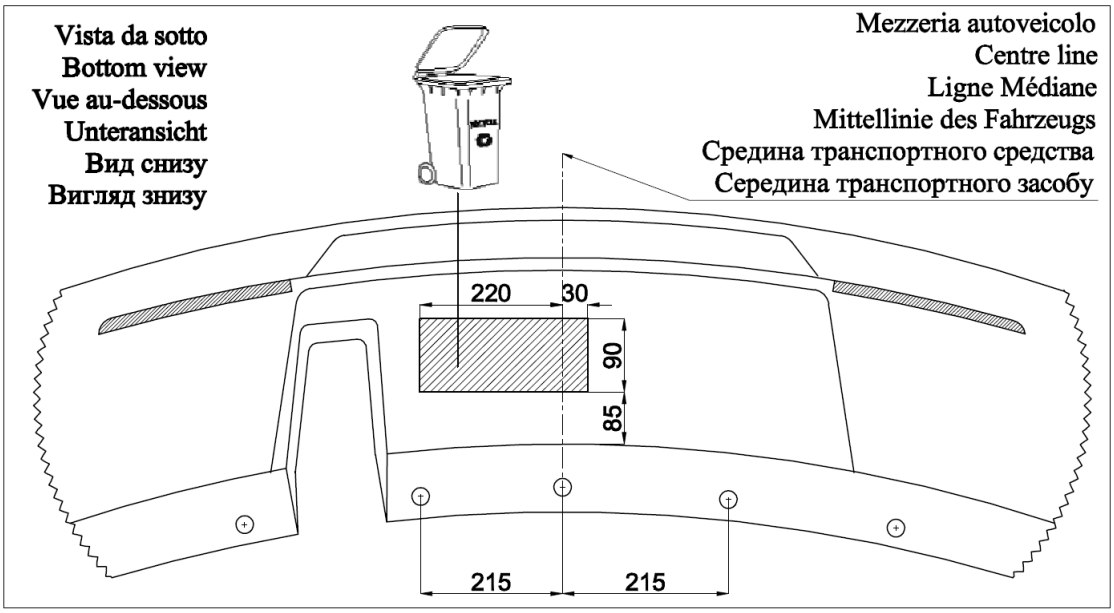

33020/C - 33020/F

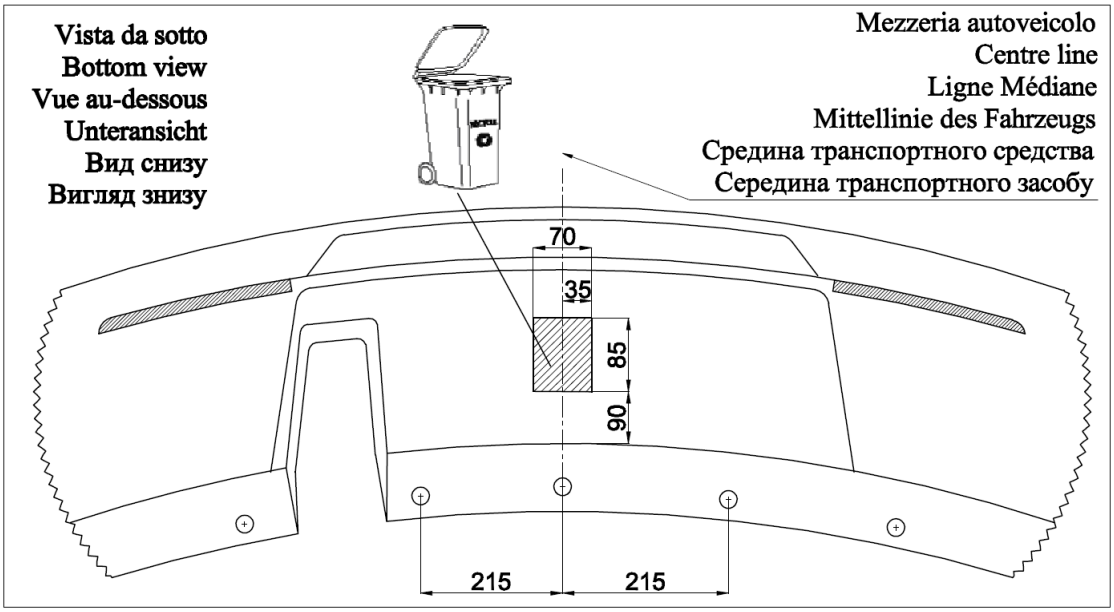

REV. 00

TAGLIO PARAURTI
BUMPER'S CUT
DÉCOUPE PARE-CHOCS
AUSSCHNITT STOßSTANGE
РАЗРЕЗ БАМПЕРА
РОЗРІЗ БАМПЕРУ

SEAT TOLEDO

33020/C - 33020/F

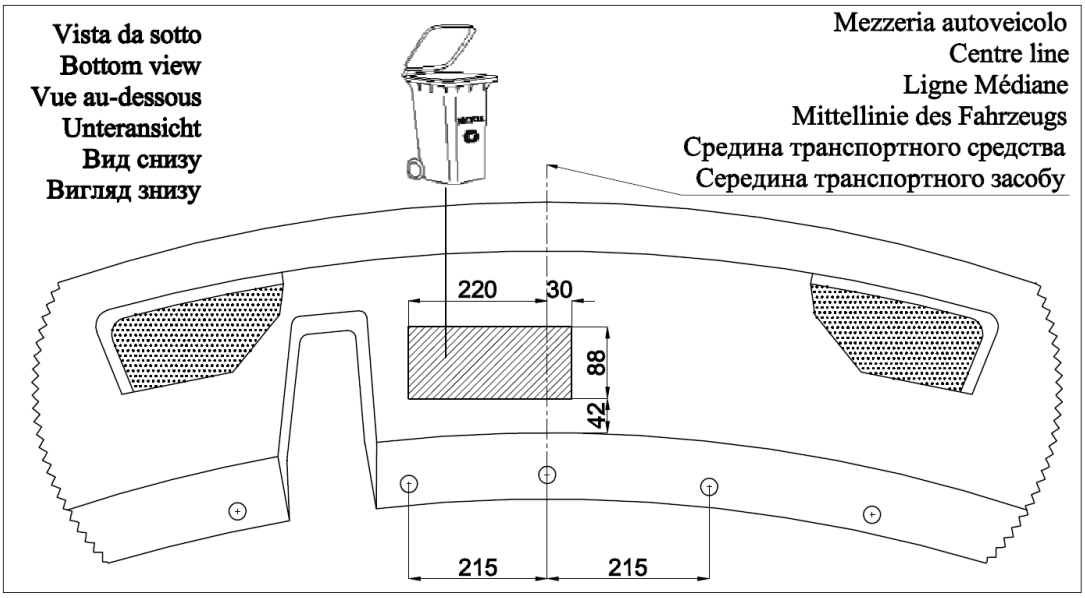

33020/C - 33020/F

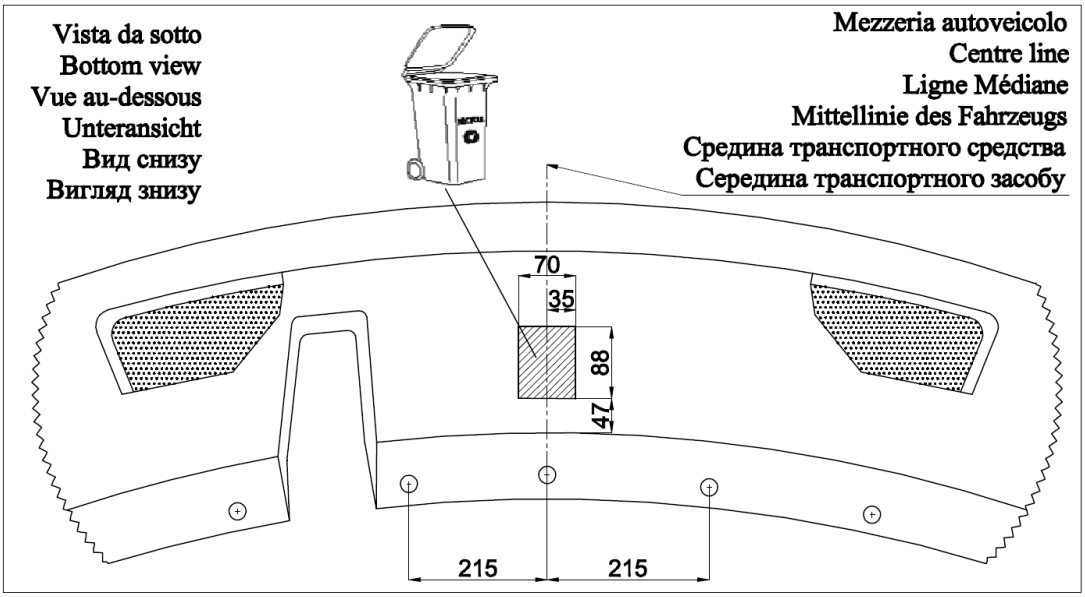

REV. 00

MECCANISMO MOD. C 2007

tel. +39 075 5280260
fax +39 075 5287033
www.umbrarimorchi.it
umbrarimorchi@umbrarimorchi.it

NL - Montage	**S** - Montering	**I** - Montaggio
GB - Mounting	**DK** - Tilkobling	
D - Montage	**FIN** - Asennus	
F - Montage	**E** - Montaje	

NL - Demontage	**S** - Demontering	**I** - Smontaggio
GB - Disounting	**DK** - Frakobling	
D - Demontage	**FIN** - Irrotta	
F - Démontage	**E** - Desmontaje	

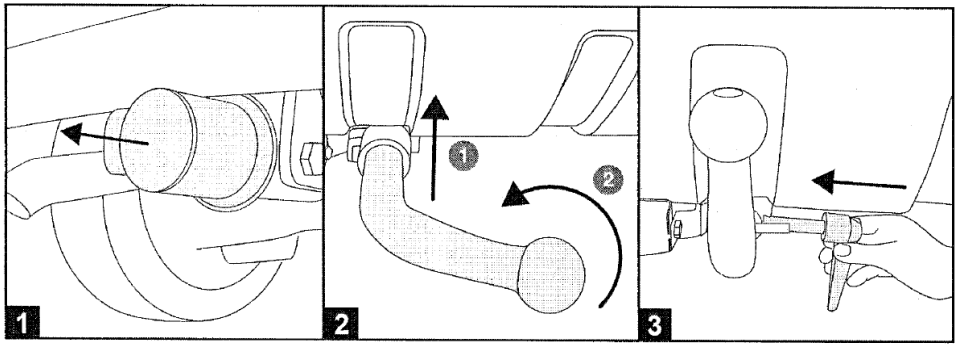

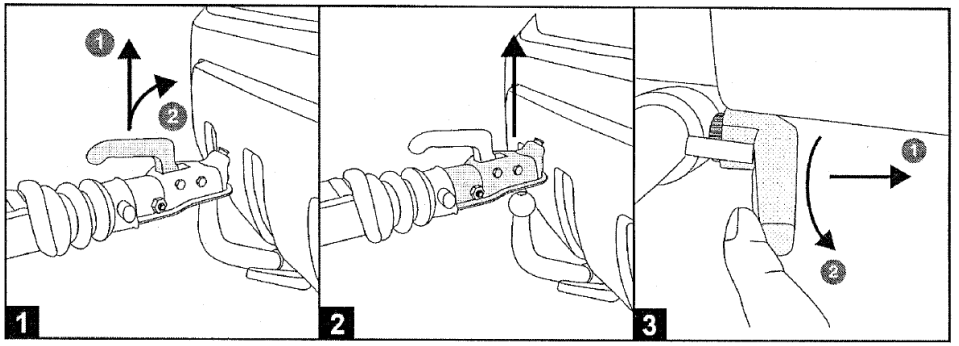

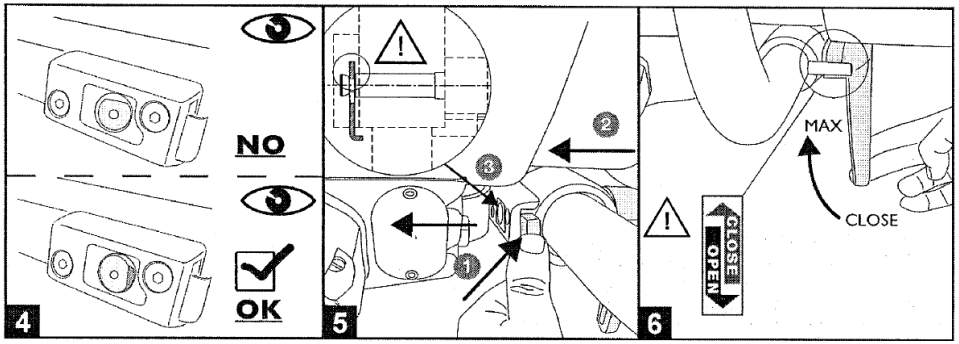

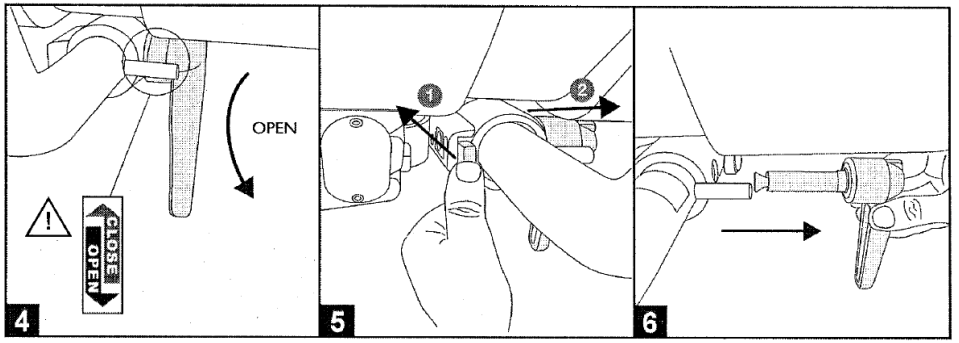

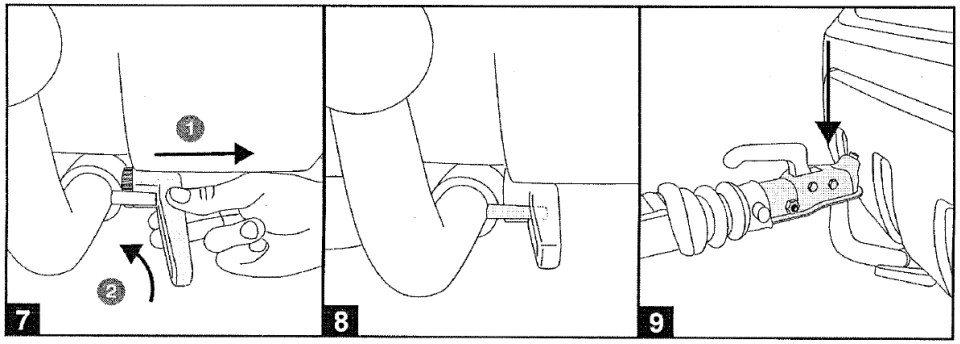

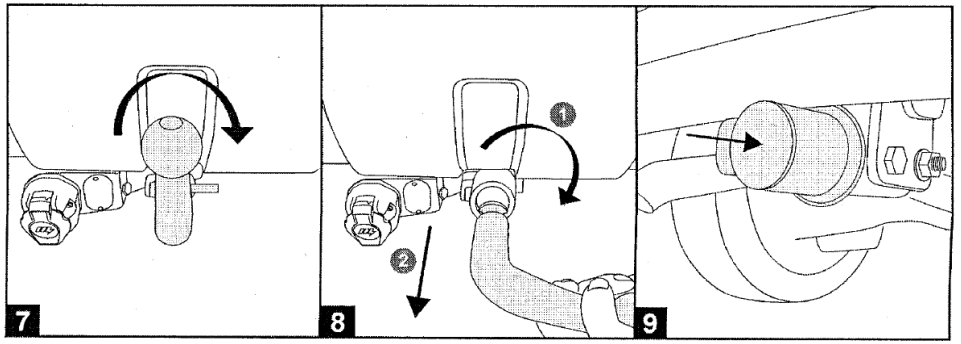

P. 7 / 8

UMBRA RIMORCHI

01/01/11

v. 1.0

33020
- SEAT TOLEDO,
SEAT ALTEA XL-

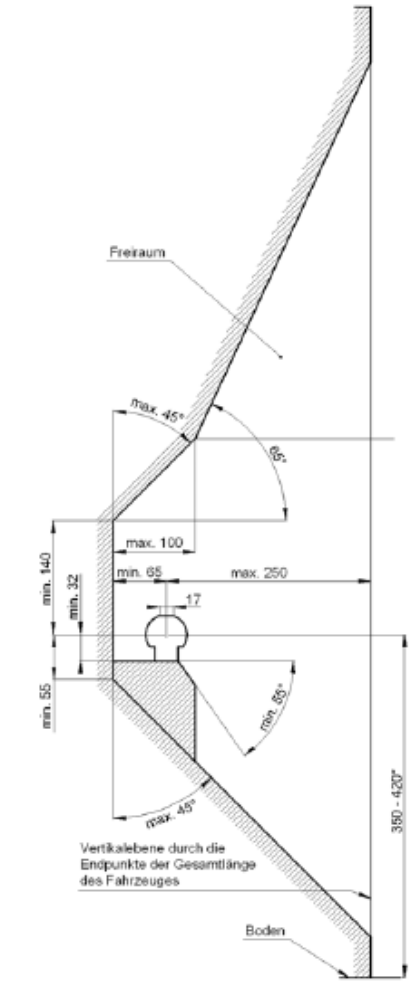

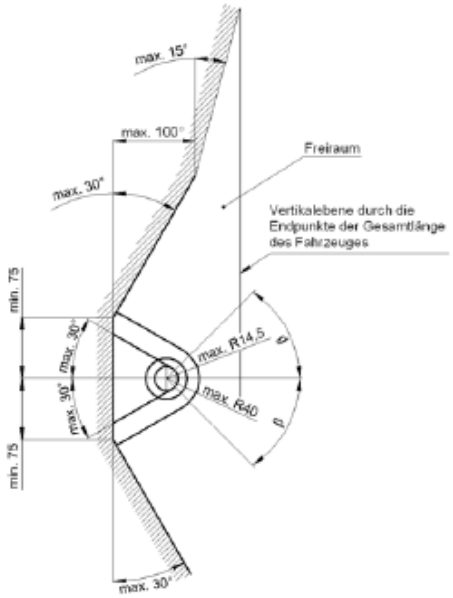

D Der Freiraum nach Anhang 7, Abbildung 25a und 25b der Richtlinie ECE-R 55 ist zu gewährleisten.

CZ Volný prostor ve smyslu Přílohy VII, obr. 25a a 25b směrnice ECE-R 55 musí být zaručen.

DK Det skal sikres, at der er spillerum i overensstemmelse med bilag 7, fig. 25a og 25b i henhold til direktiv ECE-R 55.

E Hay que garantizar el espacio libre conforme al anexo 7, fig. 25a y 25b de la directiva ECE-R 55.

F La zone de dégagement, selon l'annexe 7, figure 25a et 25b de la directive ECE-R 55, doit être assurée.

FIN Välyksen tulee täyttää ohjeen ECE-R 55 liitteen 7 kuvissa 25a ja 25b ilmoitetut vaatimukset.

GB Make sure to provide clearance according to appendix 7, figures 25a and 25b of the ECE-R 55 regulations.

GR Πρέπει να εξασφαλίζεται ο ελεύθερος χώρος σύμφωνα με το παράρτημα 7, σχήμα 25a και 25b της κοινοτικής οδηγίας ECE-R 55.

HU Biztosítani kell az ECE-R 55 irányelv szerinti, 7. számú függelék, 25a. és 25b ábrákban jelölt szabad teret.

I Deve essere garantito lo spazio libero secondo l'allegato VII, figure 25a e 25b della normativa europea ECE 55 R-01.

N Det må sørges for fritt rom i samsvar med tillegg 7, figur 25a og 25b i direktiv ECE-R 55.

NL De vrije ruimte volgens supplement 7, afbeelding 25a en 25b van richtlijn ECE-R 55 moet gewaarborgd zijn.

PL Należy zapewnić wolną przestrzeń zgodnie z załącznikiem 7, rys. 25a i 25b, dyrektywy ECE-R 55.

RUS Оставлять свободное пространство согласно Приложению 7, рис. 25a и 25b Директивы ECE-R 55.

S Spelrummet enligt bilaga 7, bild 25a och 25b i riktlinje ECE-R 55, måste garanteras.

D * bei zulässigem Gesamtgewicht des Fahrzeuges

CZ * při celkové přípustné hmotnosti vozidla

DK * ved tilladt totalvægt for køretøjet

E * con peso total autorizado del vehículo

F * pour poids total en charge autorisé du véhicule

FIN * Ajoneuvon suurimmalla sallitulla kokonaispainolla

GB * at gross vehicle weight rating

GR * για το επιτρεπτό μικτό βάρος του οχήματος

HU * A jármű megengedett összsúlya esetén

I * per il peso complessivo ammesso del veicolo

N * ved kjøretøyets tillatte totalvekt

NL * bij toegestaan totaal gewicht van het voertuig

PL * przy dopuszczalnym ciężarze całkowitym pojazdu

RUS * при допустимом общем весе автомобиля

S * vid fordonets tillåtna totalvikt